Technical Specifications / Data Sheet

4 Drawer Under-Counter Freezer

MB-300UDFR

MILTON BRO

Core Engineering & Build Quality

Built to perform in the most demanding culinary environments, our equipment combines heavy-duty construction with precision climate control.

Cooling Technology

Improved energy classification due to the use of R-290 refrigerant, electronic fans and optimized air circulation for better interior temperature uniformity. Greater precision in temperature control. Hinged doors for automatic return and permanent pressure during closing.

Technical Details	
Temperature Range	-18 to -22
Fan Speed	1800RPM
Refrigerant	R290 (95g)
Condensation System	Forced Air
Evaporation System	Forced-Air Evaporator with Anti-corrosion Epoxy Coating
Defrost Type	Electric Heater
Defrost Heater Power Consumption	750W
Door Heater Power Consumption	61W
Compressor Power Consumption	510W
Total Power Consumption	1321W
Rated Voltage	220V - 240V
Rated Frequency	50Hz/60Hz
Refrigerated Capacity Volume	300L
Expansion Device	Capillary
Gross Weight	130kg
Net Weight	115kg
Climate Class	5
Product Dimension	1420 X 700 X 860mm
Packaging Dimension	154 x 75 x 90cm

Cabinet Construction	
Exterior Material	AISI 304 Stainless Steel
Back Material	AISI 304 Stainless Steel
Interior Material	AISI 304 Stainless Steel

Product Features	
Digital Temperature Controller	1
180 Degrees Openable Stainless-Steel Door, Right/Left Hinged	4
Hygienic Internal Corners	Yes
Magnetic Doors	Yes
Door LED Light	N/A
Adjustable Round Legs	4
Removable and Cleanable Condenser Air Filters	Yes
Safety & Hygiene Guidelines	Yes
Insulated By High Density Polyurethane Component	Yes
Fast Cooling	Yes
Eco-Friendly Refrigerant	R-290
High Energy Efficiency	Yes
High Quality Door Gasket	Yes
Condensate Pan	Yes

Shelf Details	
Adjustable Epoxy-Coated Shelf Dimension	N/A
No. of Adjustable Epoxy-Coated Shelves	2

Insulation Details	
Insulation Component	Polyurethane with High Density 42kg/m3, CFC Free Zero ODP and low GWP
Insulation Thickness	50 to 60mm

Heated Door Frames	
No. of Heaters	1
Heater Code	MB-H44.4
Heater Length	640mm
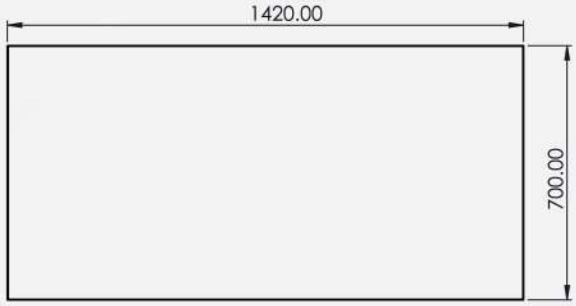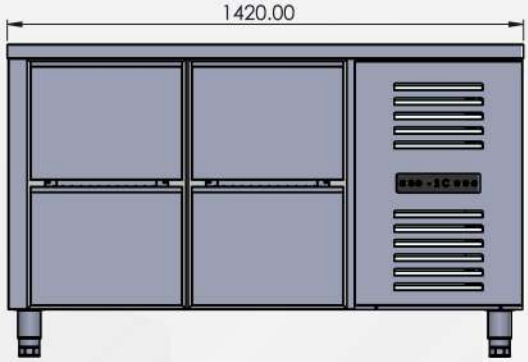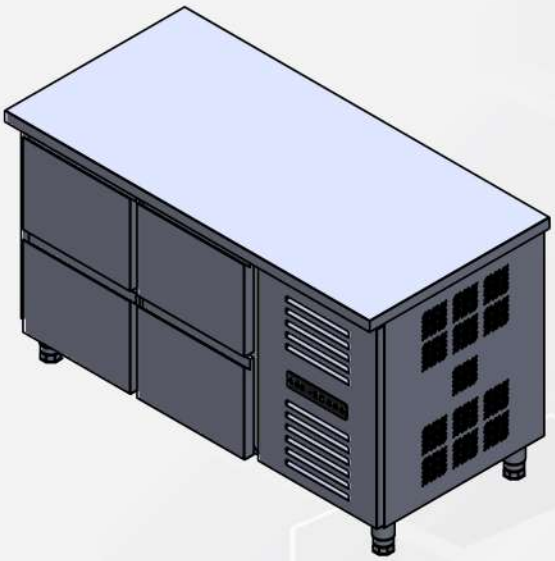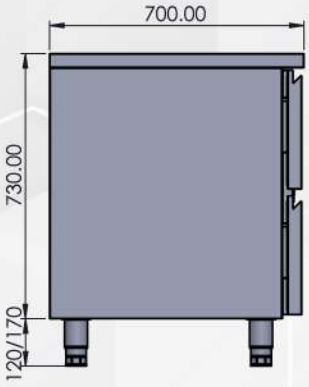
Options
Wi-Fi Enabled Smart Digital Temperature Controller
Wheels
Colour Coating
Custom Handles
Plastic Fish Container